gears

[mining]

the gearbox specialist

January 2011

getriebe

Profile

For decades, Jahnel)(Kestermann has been an innovative company in the development and production of gear units for all industrial applications. Constructive intelligence, readiness to invest, close cooperation with scientific institutes as well as the high standard of production and quality assurance are the main reasons why Ja)(Ke is among one of the leading companies of the power transmission engineering in Germany. The company was founded in 1910 and with its 250 employees an annual turnover of approx. € 35,5 million is aspired in 2006.

Besides gear units made to catalogue, Ja)(Ke specialised in custom-made or small-lot production of special gear units (max. unit weight approx. 225 t) as well as gear wheels (max. diameter 3 000 mm; welded, case-hardened and ground).

- They are used in the following areas:
- mining (e. g. crushers, haulage-, plough- and conveyor systems)
- chemical industry (e. g. agitators, i. e. gear and agitator, mixers)
- materials handling technology / open-pit mining (e. g. bucket wheels, stockpile pick- ups, belt type spreaders, conveyor belts, hoisting gears, clamping winches,)
- rubber and plastics industry (e. g. extruders, mixers, calenders)
- metallurgical industry (e. g. converters)
- steel and iron industry (e. g. rolling mills, coilers, shears, saws)
- shipbuilding (e. g. dredging: cutter heads, - wheels, winches)
- cement industry (e. g. kilns, mills, levigating-, comminution-, briquetting plants)
- water engineering industry (e. g. locks, vertical lift gates)
- wind power industry
- sugar industry (e. g. presses, minglers)

A well-trained service team is always ready to assist the customers over the world.

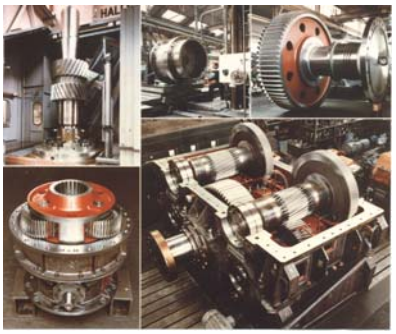

Jahnel-Kestermann Getriebewerke GmbH · PO Box 101249· 44712 Bochum· Germany Tel. +49(0)234-339-238· Fax +49(0)234-339-200· e-mail: sales@jake-gear.com

Information on our delivery program of gear units for the mining industry

Highlights of our production program for the mining industry

We produce gear units for the different applications used in the mining industry for many decades, such as

Gear units for

- chain scraper conveyor
- plough system
- conveyor system
- crusher
- coiler
- rope reel
- a. s. o.

We choose the best driving solution to every application:

- spur gears
- bevel spur gears
- planetary gears
- combined gears

Table of Contents

Bevel-helical gearbox for belt conveyors

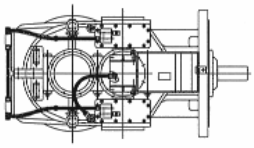

gearbox type KSt II

Planetary-gearbox generation for longwall conveyors

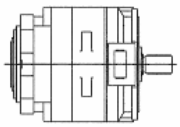

size 25

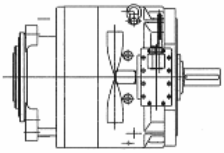

size 30/II

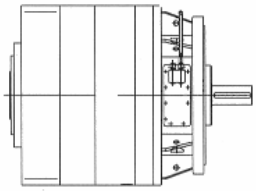

size 45V

Whatever problem you may have, we are always promptly on your doorstep.

Jahnel-Kestermann Getriebewerke GmbH · PO Box 101249· 44712 Bochum· Germany Tel. +49(0)234-339-238· Fax +49(0)234-339-200· e-mail: sales@jake-gear.com

Gearboxes for the drive of conveying belts for underground mining

For many decades, Jahnel-Kestermann has delivered this gearbox design for the different ranges of performance.

These are above all bevel-helical gearboxes in output shaft design – flange shaft. The gearboxes are flanged on brake-drum hub at the side and fixed by a torque support. The electric motors as flange motors are connected with the gearbox input flange of the casing by means of a lantern in which the coupling is installed.

The special advantage for the user is the compact arrangement.

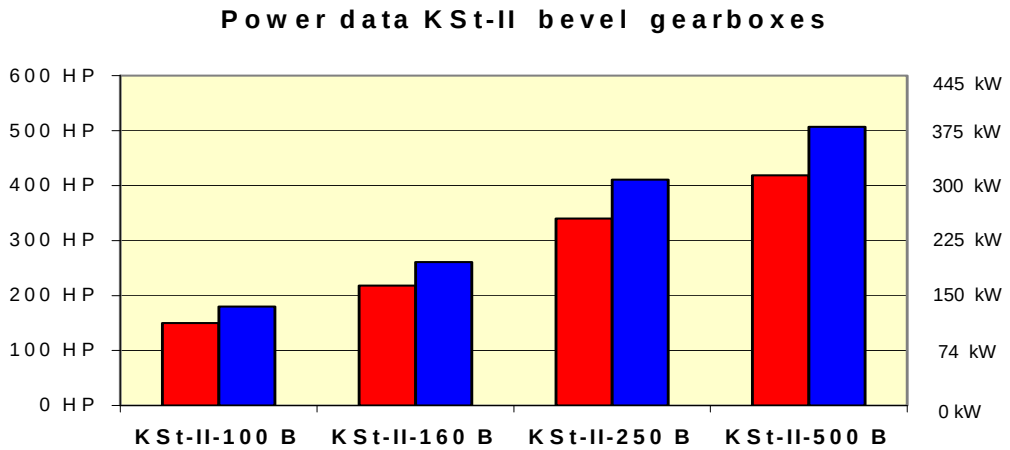

50 Hz at 1750 rpm

60 Hz at 1750 rpm

ratio : 12,5 – 31,8 : 1

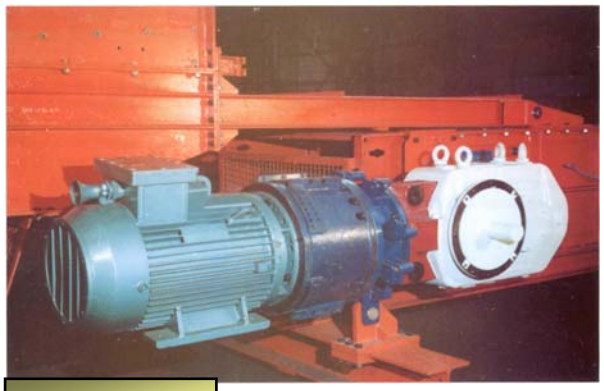

KSt-II-100B

KSt-II-160B

The Planetary-Gearbox Generation for drive of chain conveyors for underground mining

This generation has been developed by the consequent use of up-to-date research work and the subsequent calculation methods resulting therefrom. At the same space capacity an increase of performance up to 20 % can be reached.

The size „45 V“ is leading the market thanks to its performance level. This means – high performance capacity compared with the competitors.

The gearboxes are available with nominal reduction of 21 up to 50 : 1.

Performance test with continuous monitoring at test bench

KPL 45V

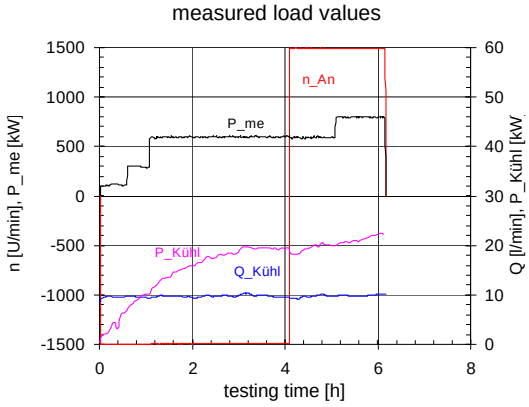

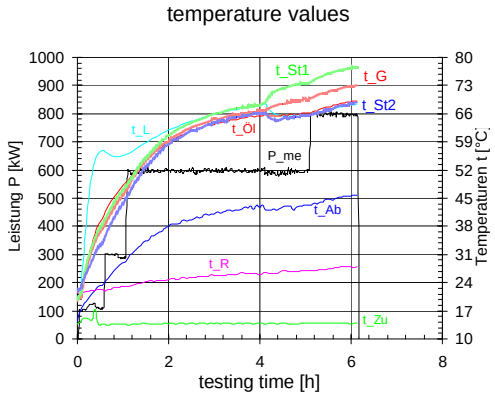

Jahnel-Kestermann Getriebewerke GmbH · PO Box 101249· 44712 Bochum· Germany Tel. +49(0)234-339-238· Fax +49(0)234-339-200· e-mail: sales@jake-gear.com

The chain conveyors for mining conditions require drive performances of 250 kW up to 1400 kW. Our gearboxes meets these requirements either as helical-planetary gearbox or as bevel-helical-planetary gearbox.

To increase the performance the sizes 35, 45 and 65 have 4 instead of 3 planets in their output –planetary step.

Here, it has been considered that the connections to the machine frame of the several types of manufacturers can be adjusted.

Therefore, the optimal conditions for the working situation has been created

Arrangement of the planetary gearbox generation with 4 planetary gears in the output step

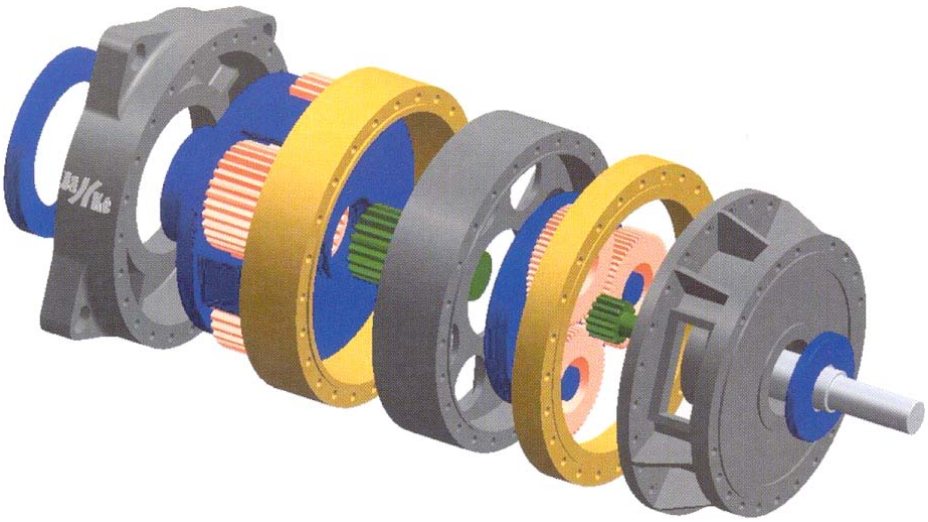

Structural Analysis and optimization using Finite-Element-Analysis

State-of-the-art machinery and gearboxes shall be light-weighted but guaranteeing highest possible operational safety. Especially for componenets which may not be covered by conventional strength calculations, the procedure of finite-elements has proven to be an appropriate means.

Besides, Ja)(Ke uses FEA as a powerful tool to gain a better understanding of gearbox strain in general. Analysing detail problems such as stress distribution and deflection in pinion cages as shown for example size „35“ allows to improve reliability of these item s by visualising their function.

Design of pinion cage

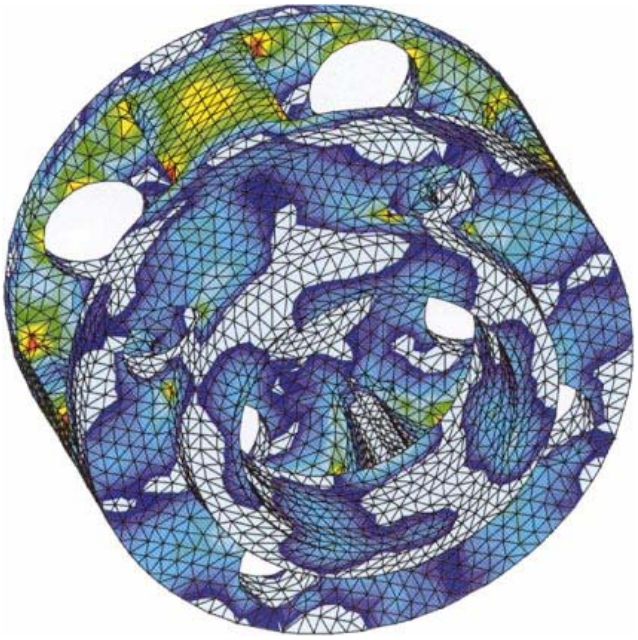

Stress distribution in a pinion cage for size 35

Performance range of the individual reducers

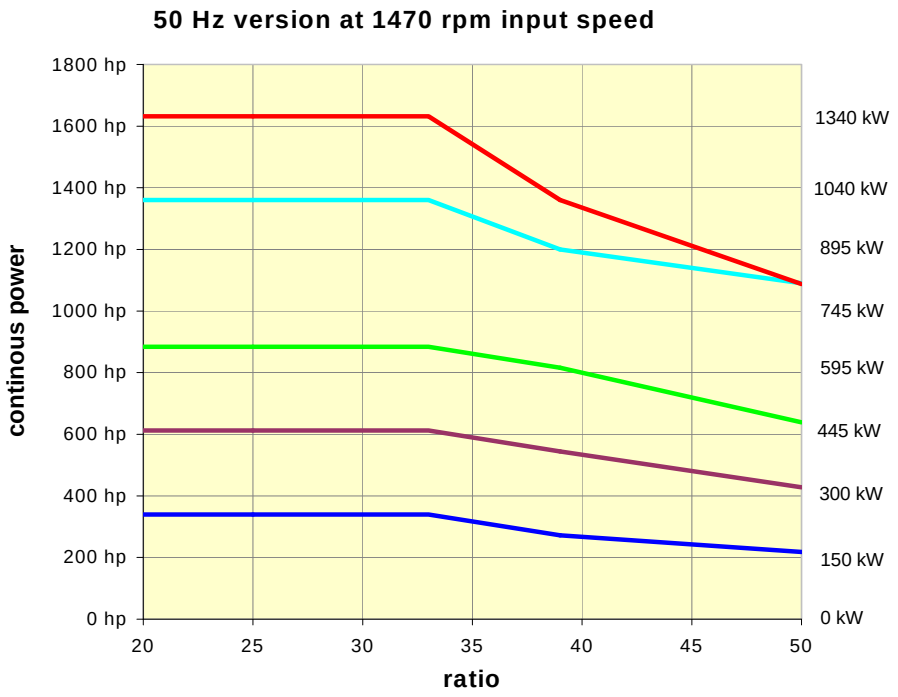

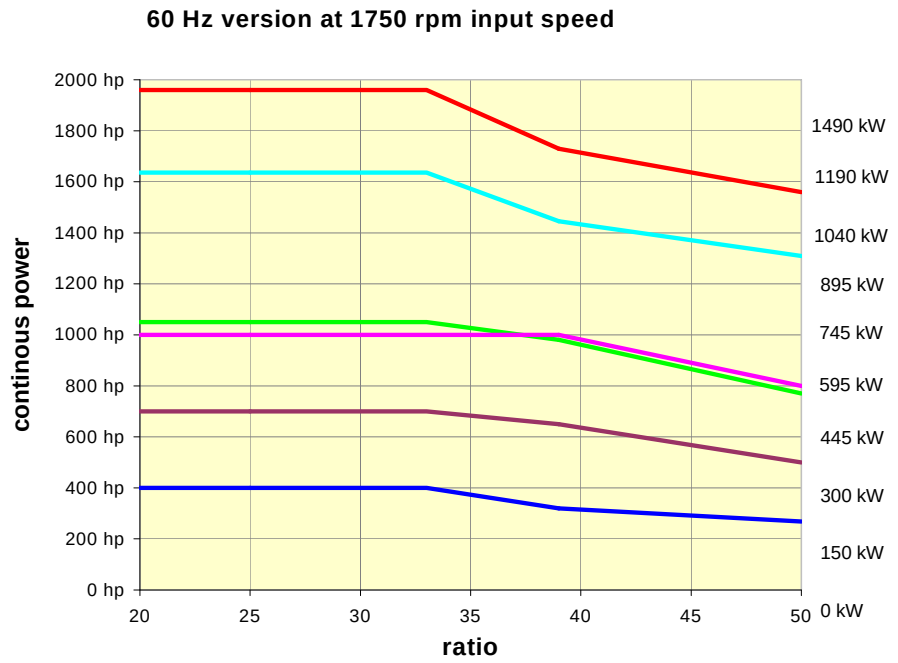

JPL / KPL 65

JPL / KPL 45 V

JPL / KPL 35

JPL / KPL 30/II

JPL / KPL 25

JPL / KPL 15

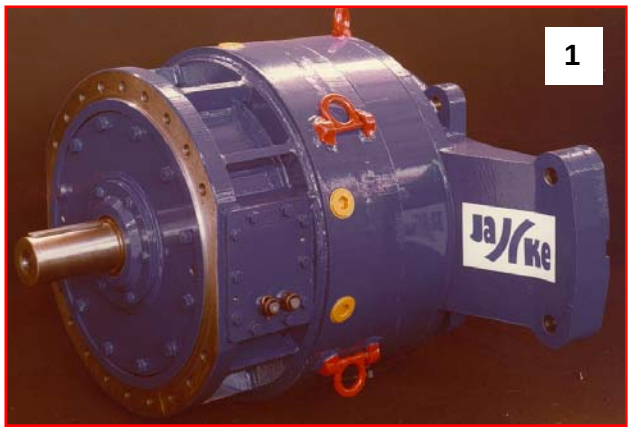

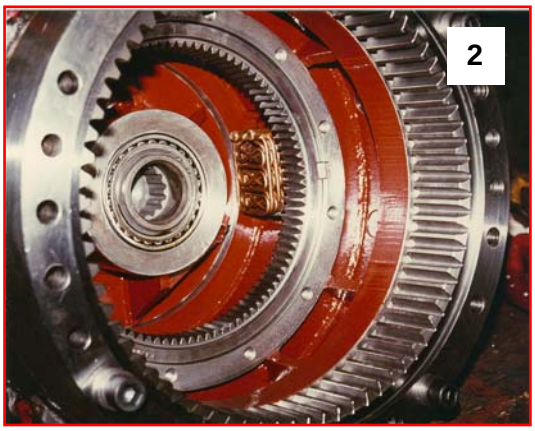

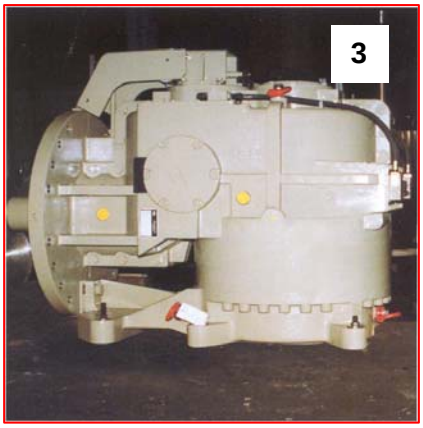

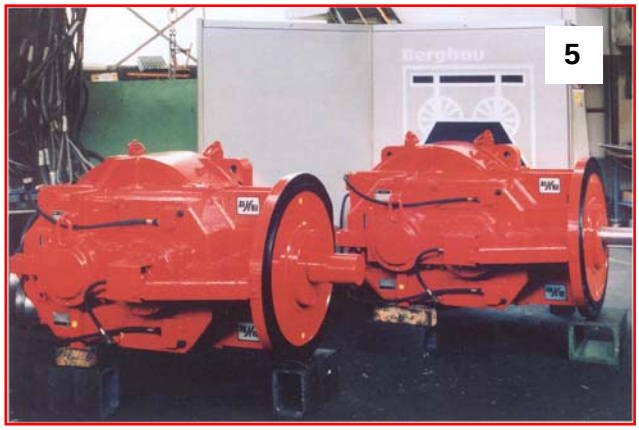

1 = JPL-15
2 = hollow shaft of JPL-15
3 = KPL-35
4 = KPL-45V during test run
5 = KPL-45V
6 = JPL-35
7 = KPL-65

Jahnel-Kestermann Getriebewerke GmbH · PO Box 101249· 44712 Bochum· Germany Tel. +49(0)234-339-238· Fax +49(0)234-339-200· e-mail: sales@jake-gear.com

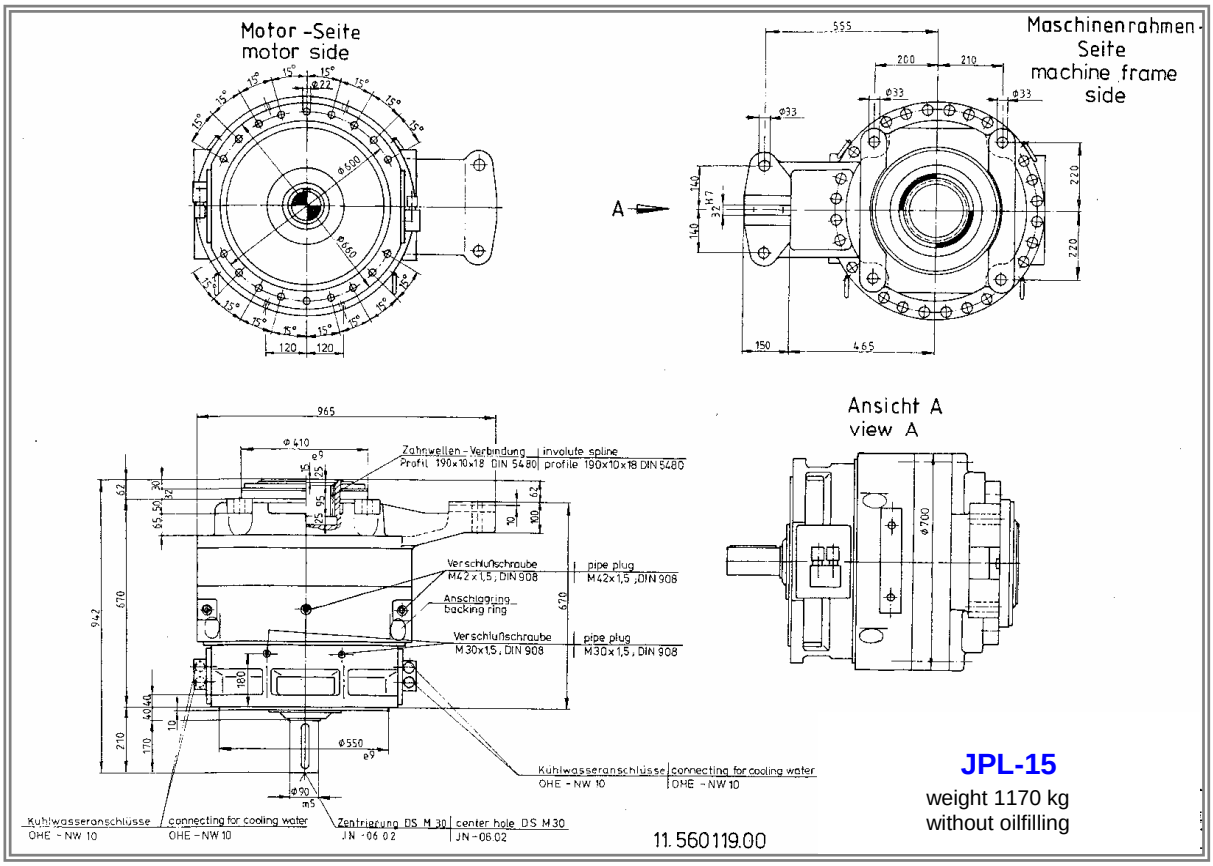
Motor -Seite
motor side
Maschinenrahmen-Seite
machine frame side
Ansicht A
view A
Zahnwellen-Verbindung Profil 190x10x18 DIN 5480
involute spline profile 190x10x18 DIN 5480
Verschlußschraube M42x1,5, DIN 908
pipe plug M42x1,5, DIN 908
Anschlagring
backing ring
Verschlußschraube M30x1,5, DIN 908
pipe plug M30x1,5, DIN 908
Kühlwasseranschlüsse OHE - NW 10
connecting for cooling water OHE - NW 10
Zentrierung DS M30 JN-06.02
center hole DS M30 JN-06.02
11.560119.00
JPL-15
weight 1170 kg
without oilfilling

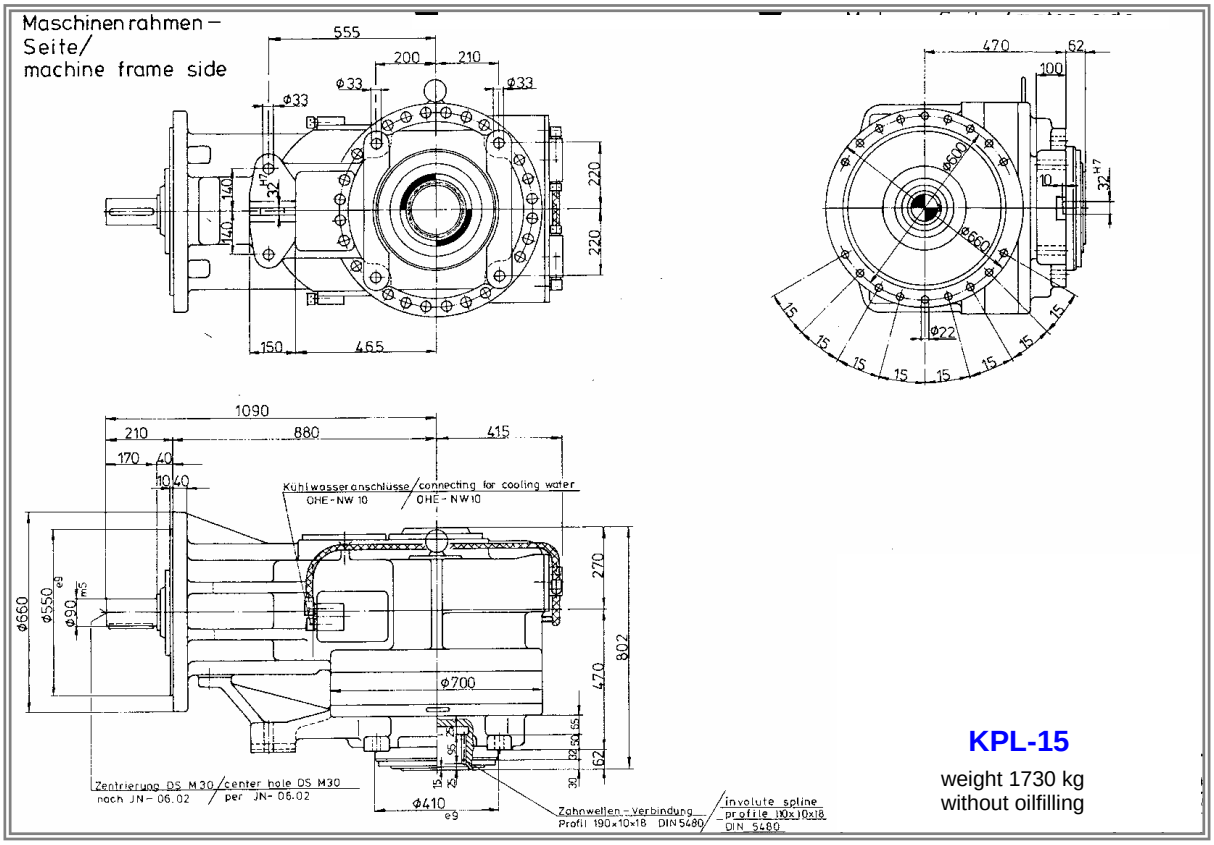
Maschinenrahmen-Seite/
machine frame side
Kühlwasseranschlüsse OHE-NW 10
connecting for cooling water OHE-NW10
Zentrierung DS M30 nach JN-06.02
center hole DS M30 per JN-06.02
Zahnwellen-verbindung Profil 190x10x18 DIN 5480
involute spline profile 190x10x18 DIN 5480
KPL-15
weight 1730 kg
without oilfilling

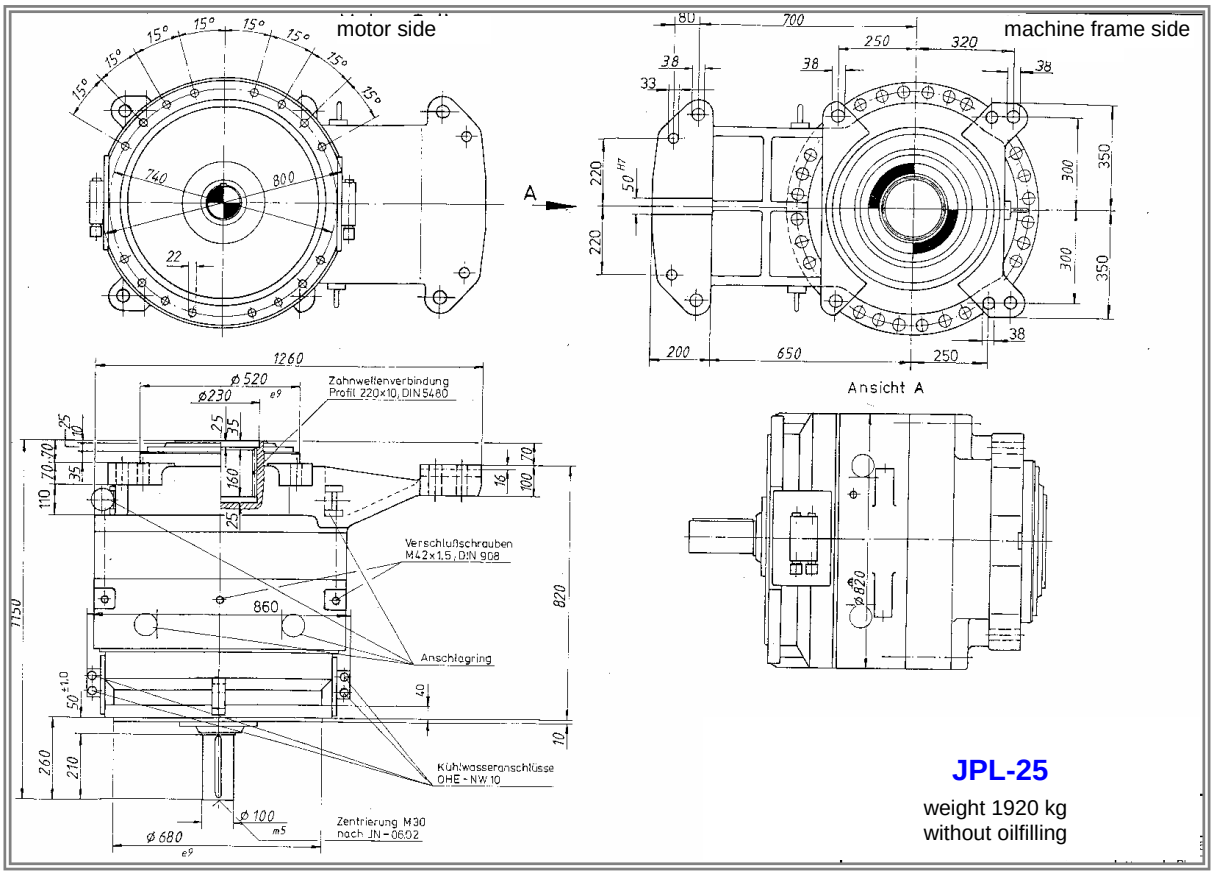

JPL-25

weight 1920 kg
without oilfilling

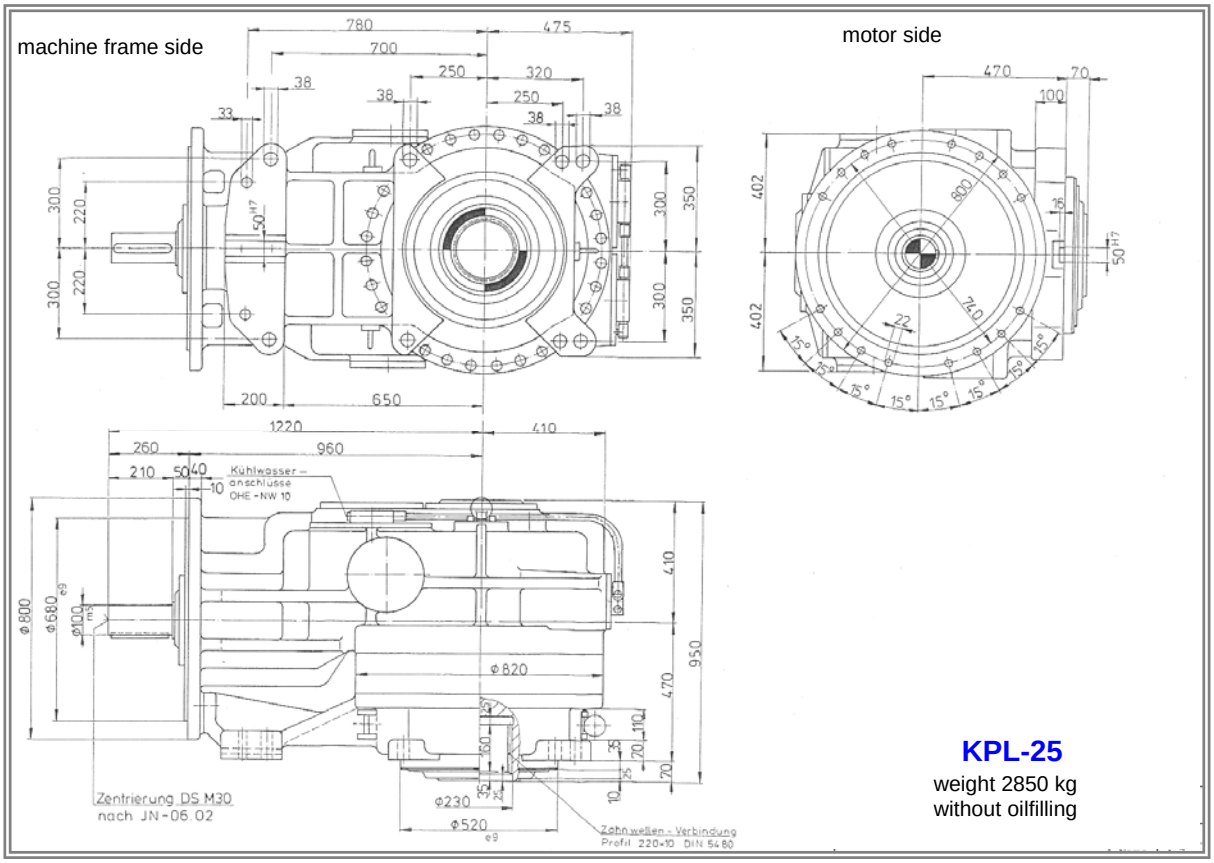

KPL-25

weight 2850 kg
without oilfilling

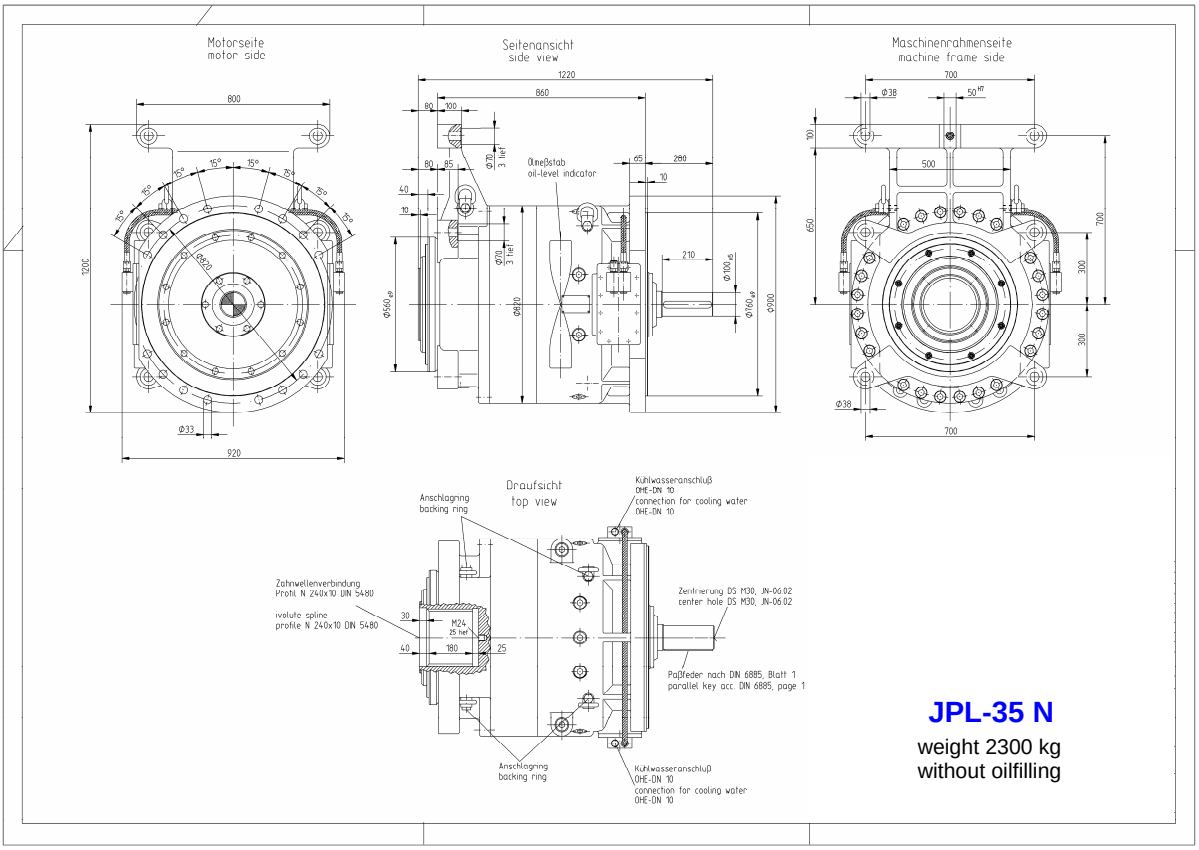

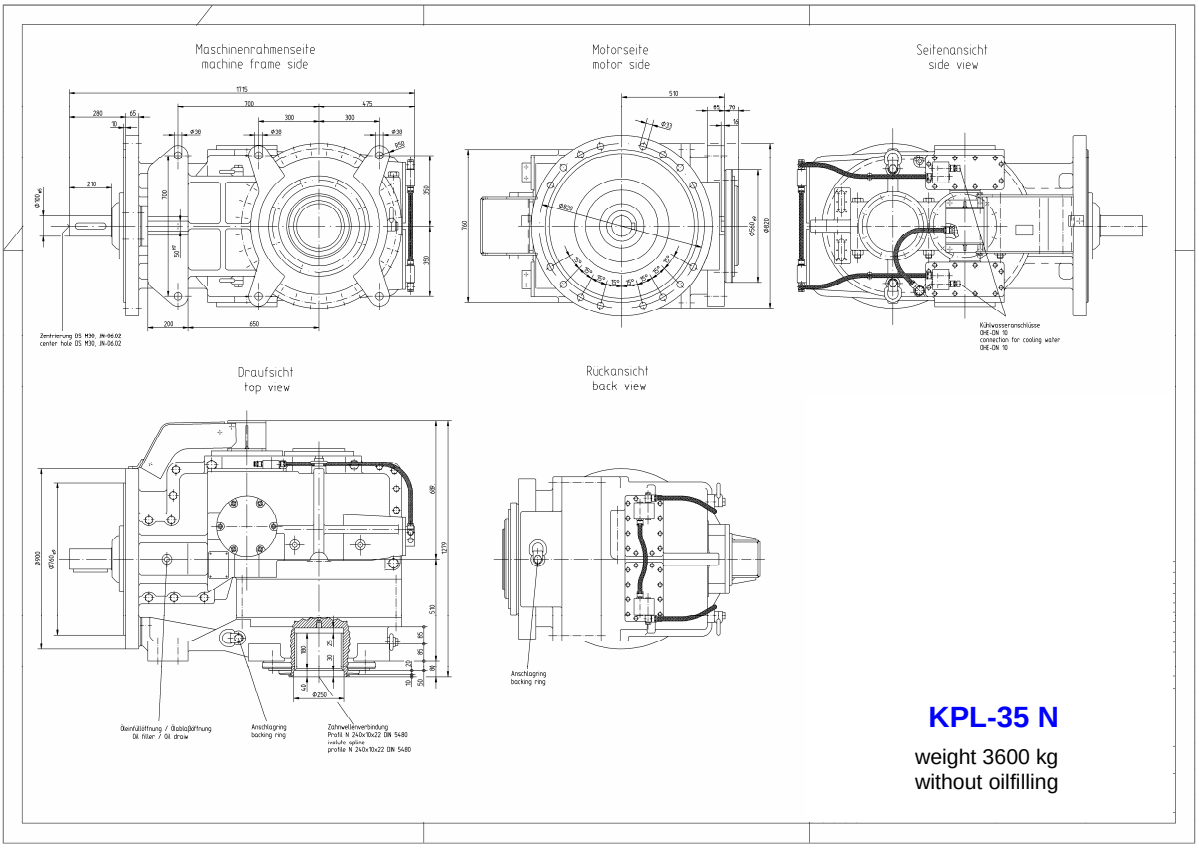

Jahnel-Kestermann Getriebewerke GmbH · PO Box 101249· 44712 Bochum· Germany Tel. +49(0)234-339-238· Fax +49(0)234-339-200· e-mail: sales@jake-gear.com

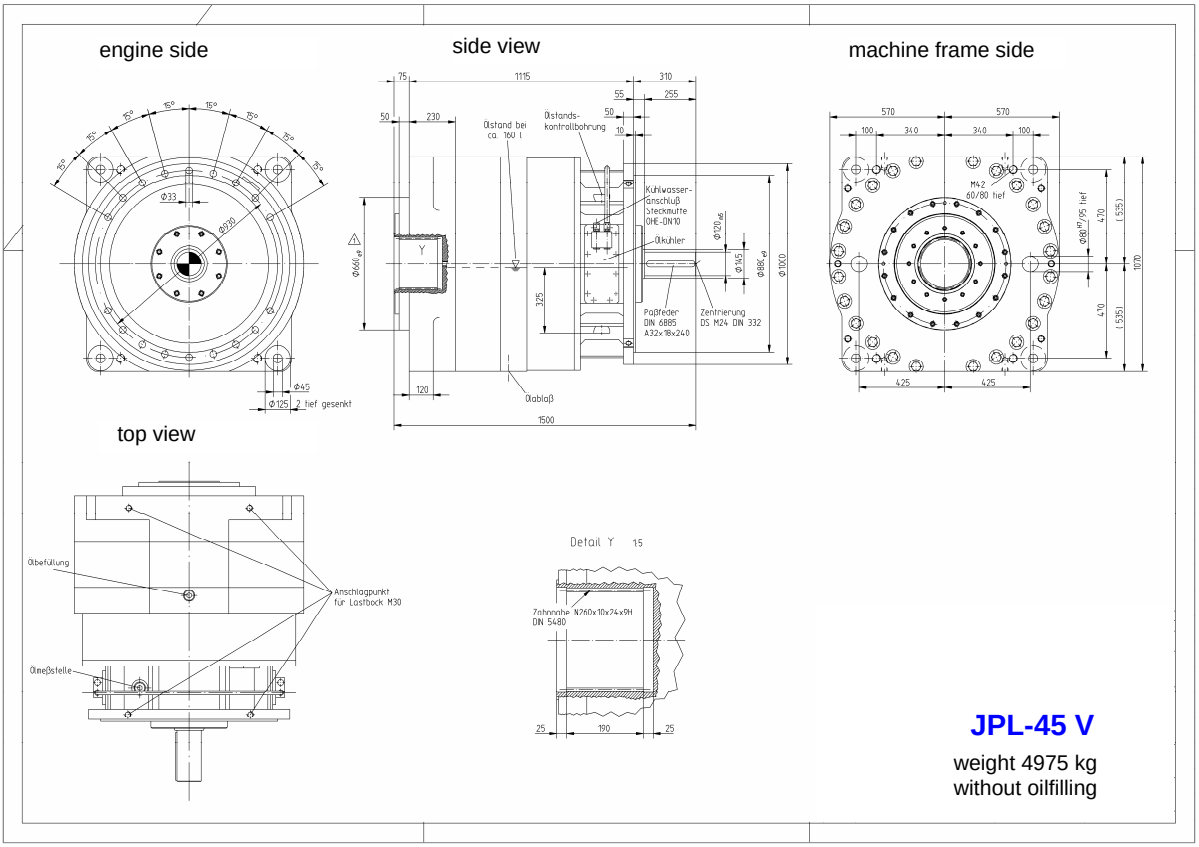
engine side
side view
machine frame side
top view
Ölstand bei ca. 160 l
Ölstands-kontrollbohrung
Kühlwasser-Anschluß Steckmutte OHE-DN10
Ölkühler
Paßfeder DIN 6885 A32x18x240
Zentrierung DS M24 DIN 332
Ölablaß
Ölbefüllung
Anschlagpunkt für Lastbock M30
Ölmeßstelle
Detail Y 1:5
Zahnnabe N260x10x74x9H DIN 5480
JPL-45 V
weight 4975 kg
without oilfilling

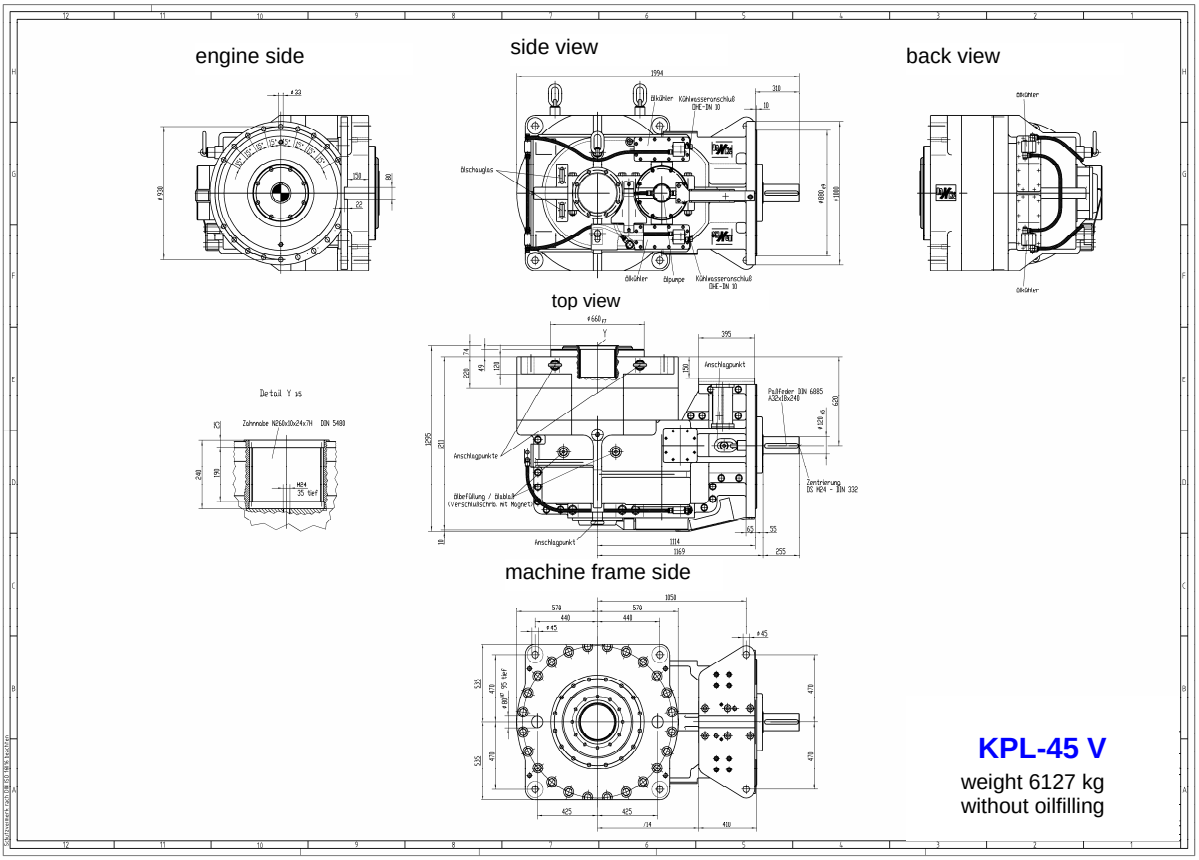
engine side
side view
back view
top view
machine frame side
Ölkühler
Kühlwasseranschluß OHE-DN 10
Ölpumpe
Anschlagpunkt
Paßfeder DIN 6885 A32x18x240
Zentrierung DS M24 - DIN 332
Ölbefüllung / Ölablaß (verschlußschr. mit Magnet)
Detail Y 1:5
Zahnnabe N260x10x74x7H DIN 5480
KPL-45 V
weight 6127 kg
without oilfilling

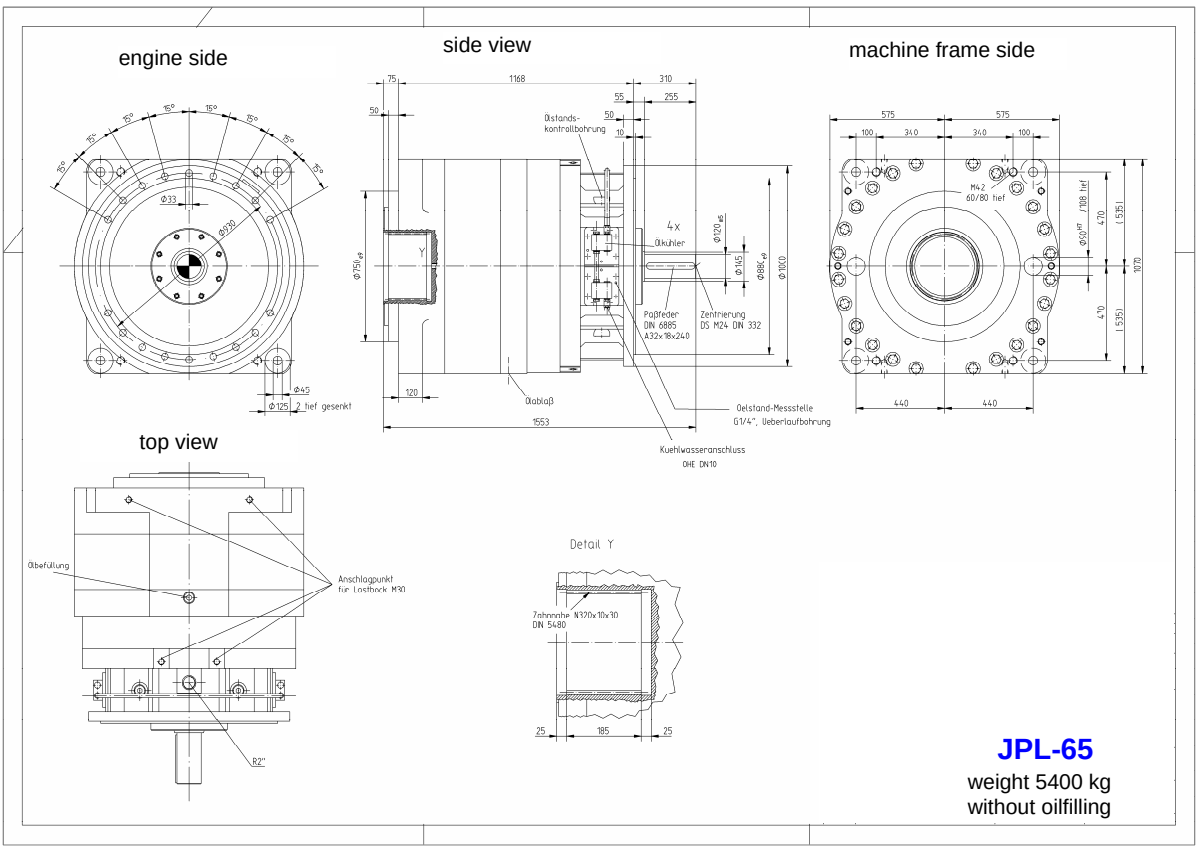
engine side
side view
machine frame side
top view
Detail Y
Ölstands-kontrollbohrung
4x Ölkühler
Paßfeder DIN 6885 A32x18x240
Zentrierung DS M24 DIN 332
Ölablaß
Oelstand-Messstelle G1/4", Ueberlaufbohrung
Kuehlwasseranschluss DHE DN10
Ölbefüllung
Anschlagpunkt fur Lastbock M30
Zahnnabe N37Tx10x30 DIN 5480
M42 60/80 tief
JPL-65
weight 5400 kg
without oilfilling

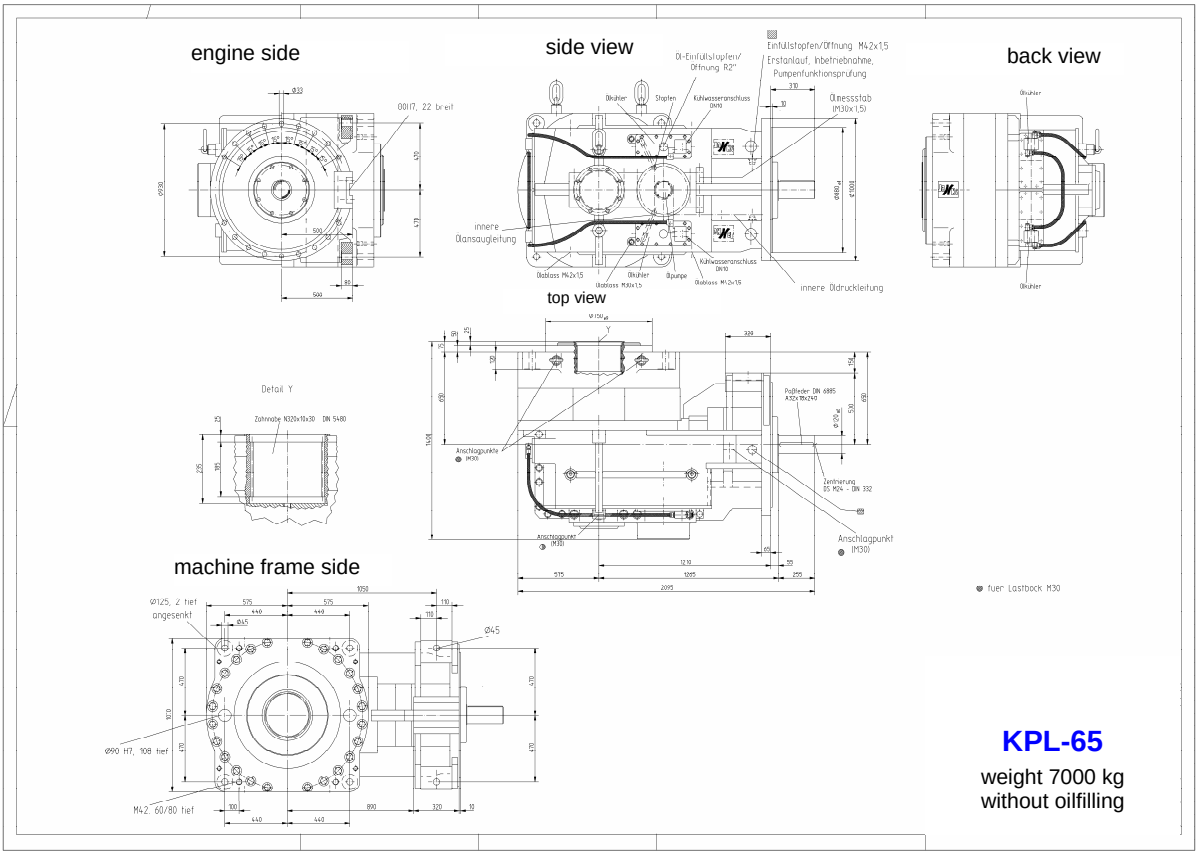
engine side
side view
back view
top view
machine frame side
Detail Y
Ölkühler
Stopfen
Kühlwasseranschluss DN10
Ölmessstab (M30x1,5)
innere Ölansaugleitung
innere Öldruckleitung
Ölablass M42x15
Ölablass M30x1,5
Ölablass M42x15
Ölpumpe
Anschlagpunkte (M30)
Paßfeder DIN 6885 A32x18x240
Zentrierung DS M24 - DIN 332
Anschlagpunkt (M30)
fuer Lastbock M30
Zahnnabe N32Tx10x30 DIN 5480
Ø90 H7, 108 tief
M42, 60/80 tief
KPL-65
weight 7000 kg
without oilfilling

getriebe

Power data of gearboxes for the mining-Industry

JPL - 15 60Hz Version

Nominal ratio		Power		Output torque	Input speed	Chain - Velocity [m/s]					
Nom.	Exact	[kW]	[hp]	[kNm]	[1/min]	473	487	530	555	567	618
21	20.848	300	402	34	1750	2.08	2.14	2.36	2.44	2.49	2.72
25	24.674	300	402	40	1750	1.76	1.81	1.97	2.06	2.11	2.33
28	28.155	300	402	46	1750	1.54	1.58	1.72	1.81	1.85	2.01
33	33.376	300	402	55	1750	1.30	1.34	1.46	1.52	1.56	1.70
39	39.328	240	322	52	1750	1.10	1.13	1.23	1.29	1.32	1.44
50	49.916	200	268	54	1750	0.87	0.89	0.97	1.02	1.04	1.13

KPL - 15 60Hz Version

Nominal ratio		Power		Output torque	Input speed	Chain – Velocity [m/s]					
Nom.	Exact	[kW]	[hp]	[kNm]	[1/min]	473	487	530	555	567	618
21	20.948	300	402	34	1750	2.07	2.13	2.32	2.43	2.48	2.70
25	24.672	300	402	40	1750	1.76	1.81	1.97	2.06	2.11	2.30
28	28.154	300	402	46	1750	1.54	1.58	1.72	1.81	1.85	2.01
33	33.429	300	402	55	1750	1.30	1.33	1.45	1.52	1.55	1.69
39	39.326	240	322	52	1750	1.10	1.13	1.23	1.29	1.32	1.44
50	49.879	200	268	54	1750	0.87	0.89	0.97	1.02	1.04	1.14

conversion :

unit	hp	kW	PS
1 hp (horsepower)	1	0,7457	1,014
1 kW (Kilowatt)	1,341	1	1,36
1 PS (Pferdestärke)	0,9863	0,7355	1

Jahnel-Kestermann Getriebewerke GmbH · PO Box 101249· 44712 Bochum· Germany Tel. +49(0)234-339-238· Fax +49(0)234-339-200· e-mail: sales@jake-gear.com

JPL - 25 60Hz Version

Nominal ratio		Power		output torque	Input speed	Chain - Velocity [m/s]			
Nom.	Exact	[kW]	[hp]	[kNm]	[1/min]	530	555	567	618
21	20.948	520	697	59	1750	2.32	2.43	2.48	2.70
25	24.674	520	697	70	1750	1.97	2.06	2.11	2.30
28	28.155	520	697	80	1750	1.72	1.81	1.85	2.01
33	33.436	520	697	95	1750	1.45	1.52	1.55	1.69
39	39.328	480	644	103	1750	1.23	1.29	1.32	1.44
50	49.916	375	503	102	1750	0.97	1.02	1.04	1.13

KPL - 25 60Hz Version

Nominal ratio		Power		Output torque	Input speed	Chain - Velocity [m/s]			
Nom.	Exact	[kW]	[hp]	[kNm]	[1/min]	530	555	567	618
21	20.948	520	697	59	1750	2.32	2.43	2.48	2.70
25	24.672	520	697	70	1750	1.97	2.06	2.11	2.30
28	28.154	520	697	80	1750	1.72	1.81	1.85	2.01
33	33.429	520	697	95	1750	1.45	1.52	1.55	1.69
39	39.326	480	644	103	1750	1.23	1.29	1.32	1.44
50	49.879	375	503	102	1750	0.97	1.02	1.04	1.14

JPL - 35 60Hz Version

Nominal ratio		Power		Output torque	Input speed	Chain - Velocity [m/s]			
Nom.	Exact	[kW]	[hp]	[kNm]	[1/min]	530	555	567	618
21	20.946	770	1030	88	1750	2.32	2.43	2.48	2.70
25	24.681	770	1030	104	1750	1.97	2.06	2.11	2.29
28	28.150	770	1030	118	1750	1.73	1.81	1.85	2.01
33	33.429	770	1030	140	1750	1.45	1.52	1.55	1.69
39	39.314	720	966	154	1750	1.24	1.29	1.32	1.44
50	49.805	565	758	154	1750	0.98	1.02	1.04	1.14

KPL - 35 60Hz Version

Nominal ratio		Power		Output torque	Input speed	Chain - Velocity [m/s]			
Nom.	Exact	[kW]	[hp]	[kNm]	[1/min]	530	555	567	618
21	20.946	770	1030	88	1750	2.32	2.43	2.48	2.70
25	24.681	770	1030	104	1750	1.97	2.06	2.11	2.29
28	28.146	770	1030	118	1750	1.73	1.81	1.85	2.01
33	33.421	770	1030	140	1750	1.45	1.52	1.55	1.69
39	39.334	720	966	155	1750	1.23	1.29	1.32	1.44
50	49.899	565	758	154	1750	0.97	1.02	1.04	1.13

JPL - 45 V 60Hz Version

Nominal ratio		Power		Output torque	Input speed	Chain - Velocity [m/s]			
Nom.	Exact	[kW]	[hp]	[kNm]	[1/min]	530	555	567	618
21	20.946	1200	1610	137	1750	2.32	2.43	2.48	2.70
25	24.681	1200	1610	162	1750	1.97	2.06	2.11	2.29
28	28.150	1200	1610	184	1750	1.73	1.81	1.85	2.01
33	33.429	1200	1610	219	1750	1.45	1.52	1.55	1.69
39	39.314	1060	1420	227	1750	1.24	1.29	1.32	1.44
50	49.805	960	1290	261	1750	0.98	1.02	1.04	1.14

KPL - 45 V 60Hz Version

Nominal ratio		Power		Output torque	Input speed	Chain - Velocity [m/s]			
Nom.	Exact	[kW]	[hp]	[kNm]	[1/min]	530	555	567	618
21	20.946	1200	1610	137	1750	2.32	2.43	2.48	2.70
25	24.681	1200	1610	162	1750	1.97	2.06	2.11	2.29
28	28.134	1200	1610	184	1750	1.73	1.81	1.85	2.01
33	33.421	1200	1610	219	1750	1.45	1.52	1.55	1.69
39	39.354	1060	1420	228	1750	1.23	1.29	1.32	1.44
50	49.831	960	1290	261	1750	0.97	1.02	1.04	1.14

JPL - 65 60Hz Version

Nominal ratio		Power		Output torque	Input speed	Chain - Velocity [m/s]				
Nom.	Exact	[kW]	[hp]	[kNm]	[1/min]	530	554	567	618	685
21		1440	1930	165	1750					
25		1440	1930	196	1750					
28	28.147	1440	1930	221	1750	1.73	1.81	1.85	2.01	2.23
33	33.388	1440	1930	262	1750	1.45	1.52	1.56	1.70	1.88
39	39.341	1270	1700	273	1750	1.23	1.29	1.32	1.44	1.60
50	49.916	1150	1540	313	1750	0.97	1.02	1.04	1.13	1.26

KPL - 65 60Hz Version

Nominal ratio		Power		Output torque	Input speed	Chain - Velocity [m/s]				
Nom.	Exact	[kW]	[hp]	[kNm]	[1/min]	530	555	567	618	685
21		1440	1930	165	1750					
25		1440	1930	196	1750					
28	28.132	1440	1930	221	1750	1.73	1.81	1.85	2.01	2.23
33	33.375	1440	1930	262	1750	1.46	1.52	1.56	1.70	1.88
39	39.317	1270	1700	272	1750	1.24	1.29	1.32	1.44	1.60
50	49.889	1150	1540	313	1750	0.97	1.02	1.04	1.14	1.26

JPL - 15 50Hz Version

Nominal ratio		Power		Output torque	Input speed	Chain - Velocity [m/s]					
Nom.	Exact	[kW]	[hp]	[kNm]	[1/min]	473	487	530	555	567	618
21	20.848	250	335	34	1470	1.75	1.80	1.96	2.05	2.09	2.28
25	24.674	250	335	40	1470	1.48	1.52	1.65	1.73	1.77	1.93
28	28.155	250	335	46	1470	1.29	1.33	1.45	1.52	1.55	1.69
33	33.376	250	335	54	1470	1.09	1.12	1.22	1.28	1.31	1.43
39	39.328	200	268	51	1470	0.93	0.95	1.04	1.09	1.11	1.21
50	49.916	160	215	52	1470	0.73	0.75	0.82	0.86	0.87	0.95

KPL - 15 50Hz Version

Nominal ratio		Power		Output torque	Input speed	Chain - Velocity [m/s]					
Nom.	Exact	[kW]	[hp]	[kNm]	[1/min]	473	487	530	555	567	618
21	20.948	250	335	34	1470	1.74	1.79	1.95	2.04	2.08	2.27
25	24.672	250	335	40	1470	1.48	1.52	1.65	1.73	1.77	1.93
28	28.154	250	335	46	1470	1.29	1.33	1.45	1.52	1.55	1.69
33	33.429	250	335	54	1470	1.09	1.12	1.22	1.28	1.31	1.42
39	39.326	200	268	51	1470	0.93	0.95	1.04	1.09	1.11	1.21
50	49.879	160	215	52	1470	0.73	0.75	0.82	0.86	0.87	0.95

JPL - 25 50Hz Version

Nominal ratio		Power		Output torque	Input speed	Chain - Velocity [m/s]					
Nom.	Exact	[kW]	[hp]	[kNm]	[1/min]	473	487	530	555	567	618
21	20.948	450	603	61	1470	1.74	1.79	1.95	2.04	2.08	2.27
25	24.674	450	603	72	1470	1.48	1.52	1.65	1.73	1.77	1.93
28	28.155	450	603	82	1470	1.29	1.33	1.45	1.52	1.55	1.69
33	33.436	450	603	98	1470	1.09	1.12	1.22	1.28	1.31	1.42
39	39.328	400	536	102	1470	0.93	0.95	1.04	1.09	1.11	1.21
50	49.916	315	422	102	1470	0.73	0.75	0.82	0.86	0.87	0.95

KPL - 25 50Hz Version

Nominal ratio		Power		Output torque	Input speed	Chain - Velocity [m/s]					
Nom.	Exact	[kW]	[hp]	[kNm]	[1/min]	473	487	530	555	567	618
21	20.948	450	603	61	1470	1.74	1.79	1.95	2.04	2.08	2.27
25	24.672	450	603	72	1470	1.48	1.52	1.65	1.73	1.77	1.93
28	28.154	450	603	82	1470	1.29	1.33	1.45	1.52	1.55	1.69
33	33.429	450	603	98	1470	1.09	1.12	1.22	1.28	1.31	1.42
39	39.326	400	536	102	1470	0.93	0.95	1.04	1.09	1.11	1.21
50	49.879	315	422	102	1470	0.73	0.75	0.82	0.86	0.87	0.95

JPL - 35 50Hz Version

Nominal ratio		Power		Ouput torque	Input speed	Chain - Velocity [m/s]				
Nom.	Exact	[kW]	[hp]	[kNm]	[1/min]	487	530	555	567	618
21	20.946	650	872	88	1470	1.79	1.95	2.04	2.08	2.27
25	24.681	650	872	104	1470	1.52	1.65	1.73	1.77	1.93
28	28.150	650	872	119	1470	1.33	1.45	1.52	1.55	1.69
33	33.429	650	872	141	1470	1.12	1.22	1.28	1.31	1.42
39	39.314	600	805	153	1470	0.95	1.04	1.09	1.11	1.21
50	49.805	470	630	152	1470	0.75	0.82	0.86	0.88	0.96

KPL - 35 50Hz Version

Nominal ratio		Power		Output torque	Input speed	Chain - Velocity [m/s]				
Nom.	Exact	[kW]	[hp]	[kNm]	[1/min]	487	530	555	567	618
21	20.946	650	872	88	1470	1.79	1.95	2.04	2.08	2.27
25	24.681	650	872	104	1470	1.52	1.65	1.73	1.77	1.93
28	28.146	650	872	119	1470	1.33	1.45	1.52	1.55	1.69
33	33.421	650	872	141	1470	1.12	1.22	1.28	1.31	1.42
39	39.334	600	805	153	1470	0.95	1.04	1.09	1.11	1.21
50	49.899	470	630	152	1470	0.75	0.82	0.86	0.87	0.95

JPL - 45 V 50Hz Version

Nominal ratio		Power		Output torque	Input speed	Chain - Velocity [m/s]			
Nom.	Exact	[kW]	[hp]	[kNm]	[1/min]	530	555	567	618
21	20.946	1000	1340	136	1470	1.95	2.04	2.08	2.27
25	24.681	1000	1340	160	1470	1.65	1.73	1.77	1.93
28	28.150	1000	1340	183	1470	1.45	1.52	1.55	1.69
33	33.429	1000	1340	217	1470	1.22	1.28	1.31	1.42
39	39.314	880	1180	225	1470	1.04	1.09	1.11	1.21
50	49.805	800	1070	259	1470	0.82	0.86	0.88	0.96

KPL - 45 V 50Hz Version

Nominal ratio		Power		Output torque	Input speed	Chain - Velocity [m/s]			
Nom.	Exact	[kW]	[hp]	[kNm]	[1/min]	530	555	567	618
21	20.946	1000	1340	136	1470	1.95	2.04	2.08	2.27
25	24.681	1000	1340	160	1470	1.65	1.73	1.77	1.93
28	28.134	1000	1340	183	1470	1.45	1.52	1.55	1.69
33	33.421	1000	1340	217	1470	1.22	1.28	1.31	1.42
39	39.354	880	1180	225	1470	1.04	1.09	1.11	1.21
50	49.831	800	1070	259	1470	0.82	0.86	0.88	0.95

JPL - 65 50Hz Version

Nominal ratio		Power		Output torque	Input speed	Chain - Velocity [m/s]				
Nom.	Exact	[kW]	[hp]	[kNm]	[1/min]	530	555	567	618	685
21		1200	1610	164	1480					
25		1200	1610	195	1480					
28	28.147	1200	1610	219	1480	1.45	1.52	1.55	1.69	1.87
33	33.388	1200	1610	260	1480	1.22	1.28	1.31	1.42	1.58
39	39.341	1000	1340	256	1480	1.04	1.09	1.11	1.21	1.34
50	49.916	800	1070	259	1480	0.82	0.86	0.87	0.95	1.06

KPL - 65 50Hz Version

Nominal ratio		Power		Output torque	Input speed	Chain - Velocity [m/s]				
Nom.	Exact	[kW]	[hp]	[kNm]	[1/min]	530	555	567	618	685
21		1200	1610	164	1470					
25		1200	1610	195	1470					
28	28.132	1200	1610	219	1470	1.45	1.52	1.55	1.69	1.87
33	33.375	1200	1610	260	1470	1.22	1.28	1.31	1.43	1.58
39	39.317	1000	1340	255	1470	1.04	1.09	1.11	1.21	1.34
50	49.889	800	1070	259	1470	0.82	0.86	0.87	0.95	1.06

Jahnel-Kestermann Getriebewerke GmbH · PO Box 101249· 44712 Bochum· Germany Tel. +49(0)234-339-238· Fax +49(0)234-339-200· e-mail: sales@jake-gear.com

JPL- / KPL-30/II for the US market

performance range

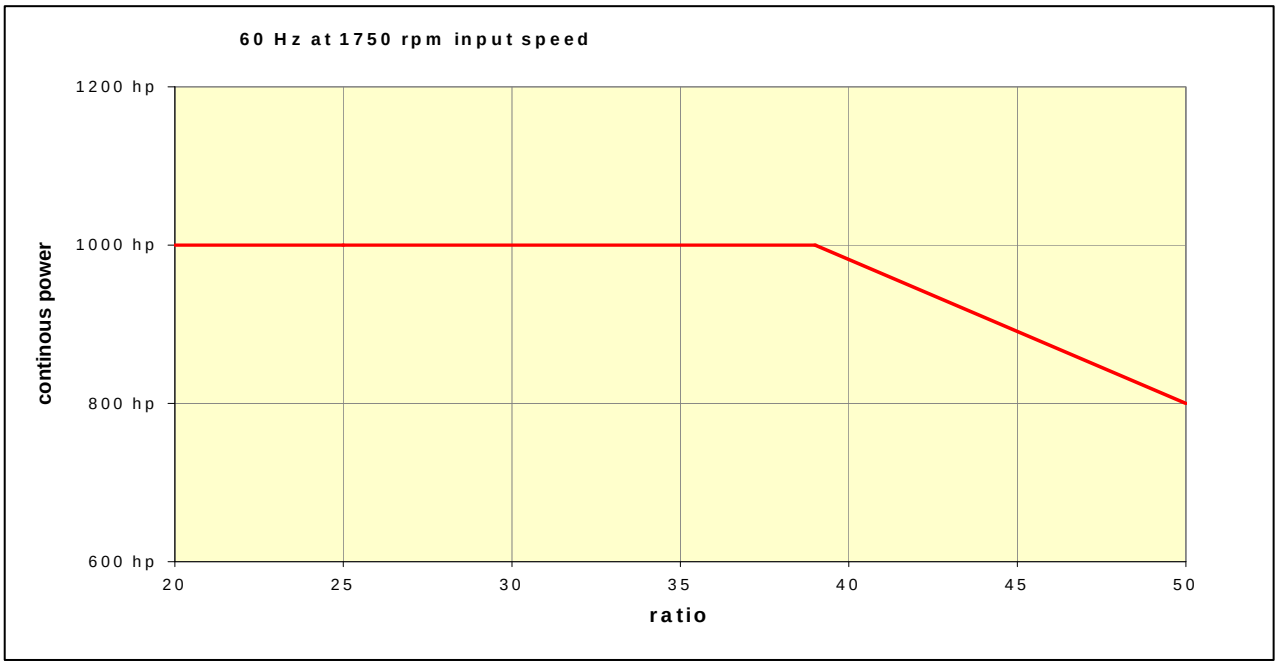

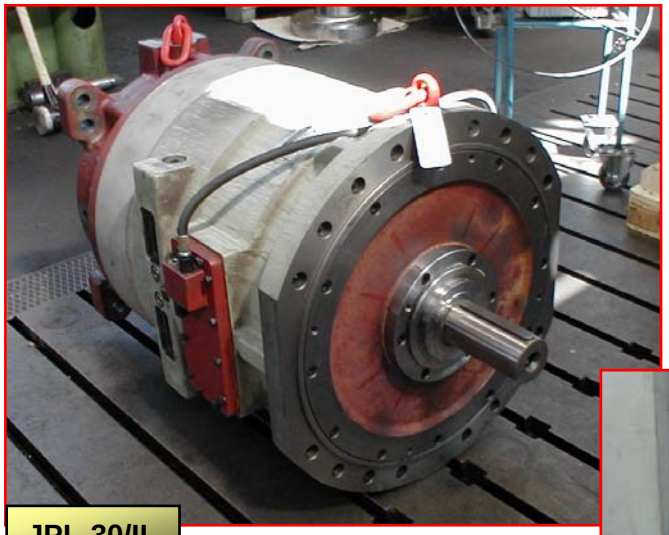

JPL-30/II

input shaft : ∅ 100 x 210

output :
standard HW 220 x 10 x 20
alternatively HW 240 x 10 x 22
(DIN 5480)

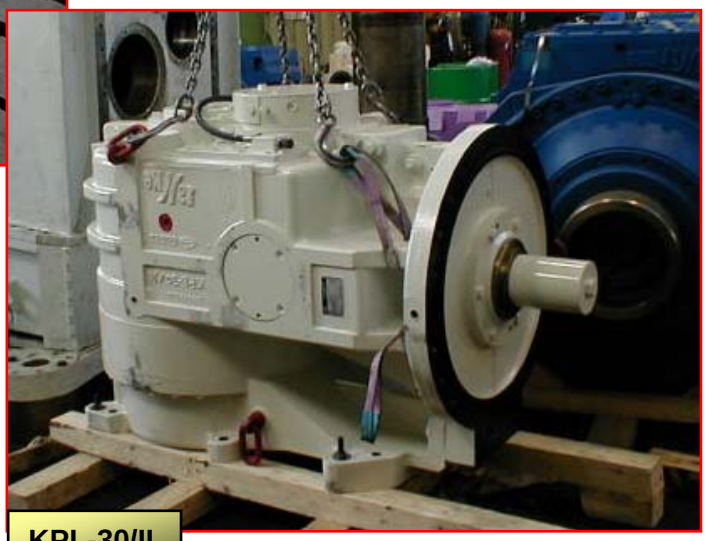

KPL-30/II

Jahnel-Kestermann Getriebewerke GmbH · PO Box 101249· 44712 Bochum· Germany Tel. +49(0)234-339-238· Fax +49(0)234-339-200· e-mail: sales@jake-gear.com

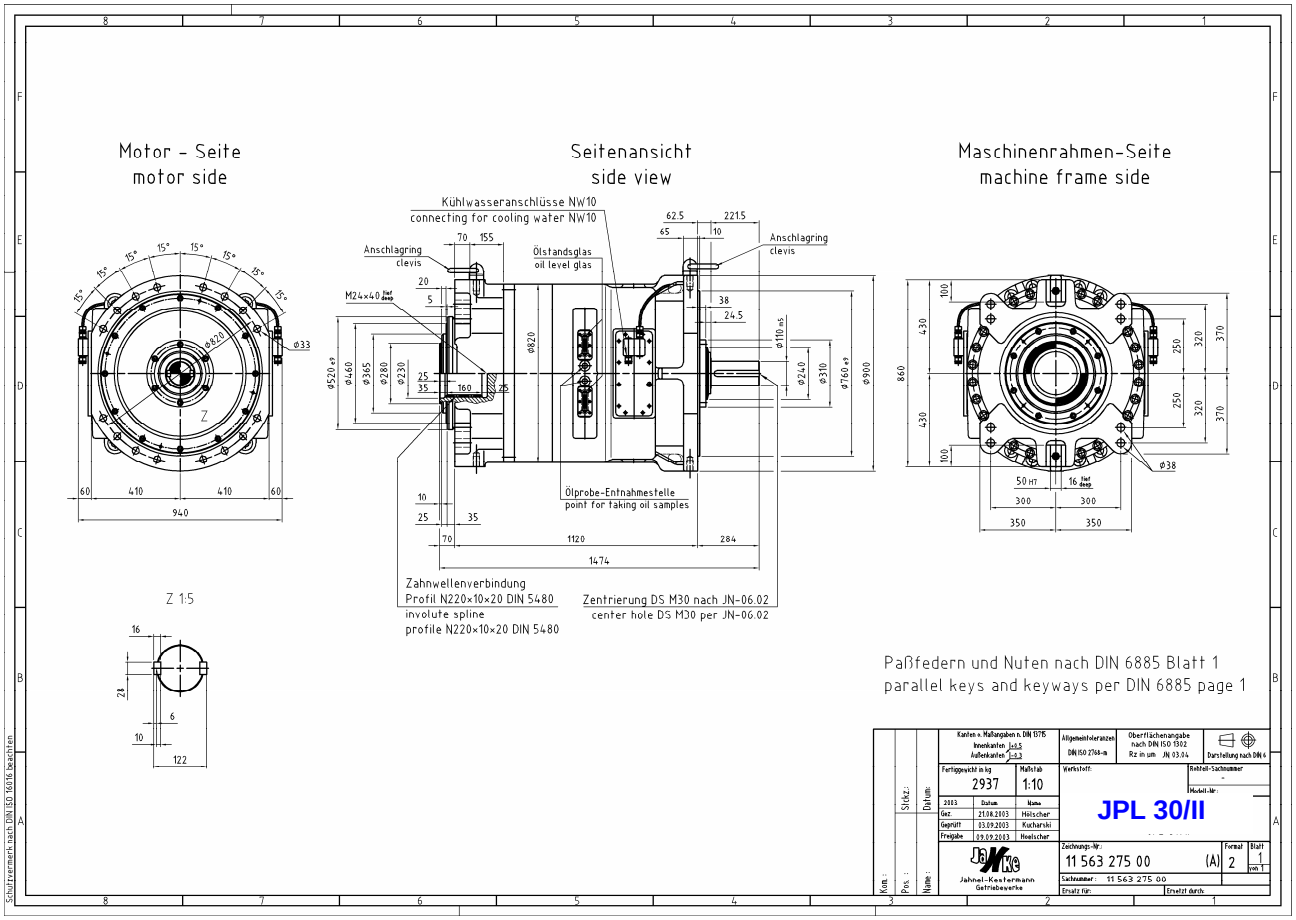
Motor - Seite
motor side
Seitenansicht
side view
Maschinenrahmen-Seite
machine frame side
Kühlwasseranschlüsse NW10
connecting for cooling water NW10
Anschlagring
clevis
Ölstandsglas
oil level glas
Ölprobe-Entnahmestelle
point for taking oil samples
Zahnwellenverbindung
Profil N220×10×20 DIN 5480
involute spline
profile N220×10×20 DIN 5480
Zentrierung DS M30 nach JN-06.02
center hole DS M30 per JN-06.02
Z 1:5
Paßfedern und Nuten nach DIN 6885 Blatt 1
parallel keys and keyways per DIN 6885 page 1
Fertiggewicht in kg
2937
Maßstab
1:10
Werkstoff:
JPL 30/II
Zeichnungs-Nr.:
11 563 275 00
(A)
Jahnel-Kestermann
Getriebewerke

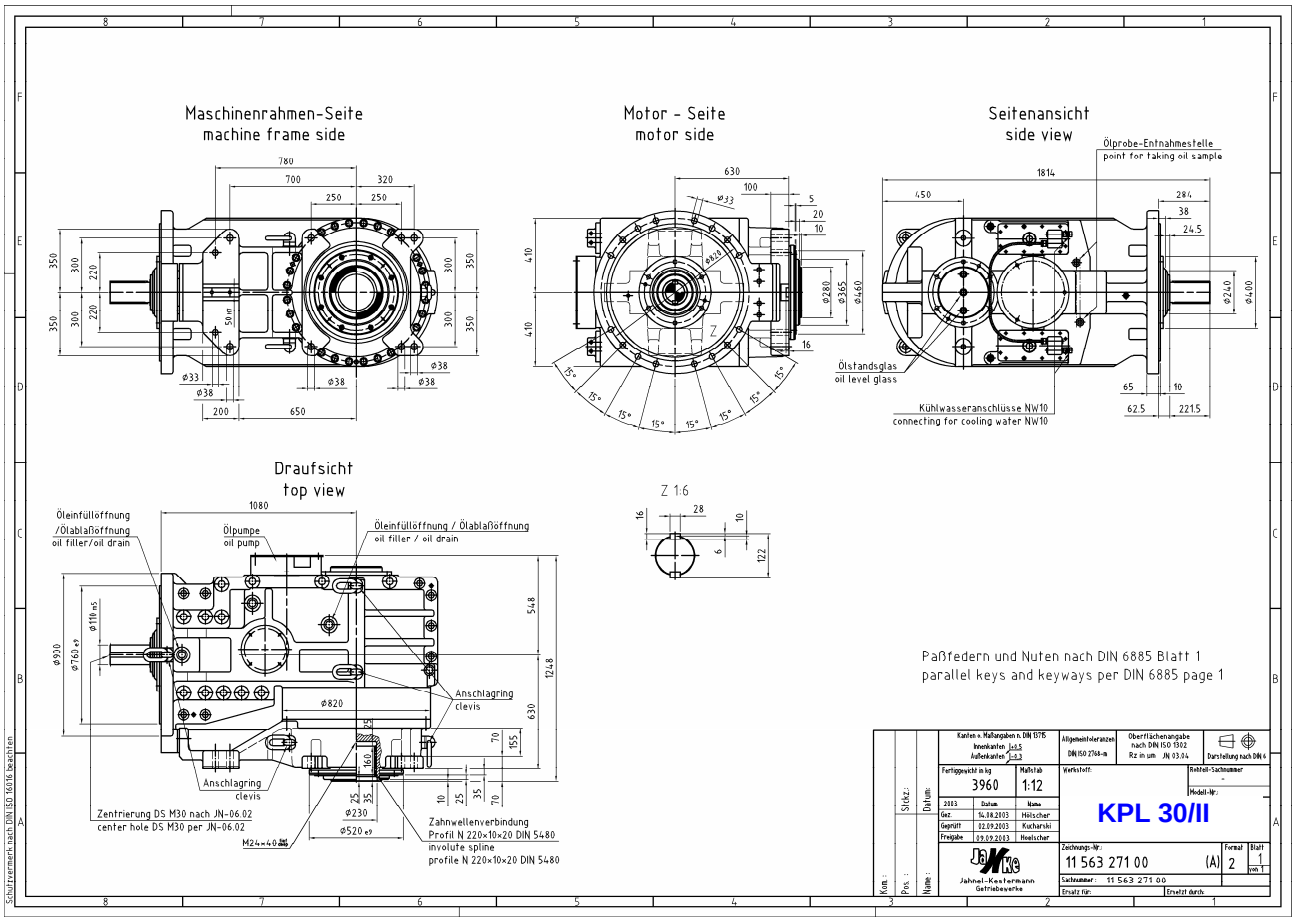
Maschinenrahmen-Seite
machine frame side
Motor - Seite
motor side
Seitenansicht
side view
Ölprobe-Entnahmestelle
point for taking oil sample
Ölstandsglas
oil level glass
Kühlwasseranschlüsse NW10
connecting for cooling water NW10
Draufsicht
top view
Öleinfüllöffnung
/Ölablaßöffnung
oil filler/oil drain
Ölpumpe
oil pump
Öleinfüllöffnung / Ölablaßöffnung
oil filler / oil drain
Anschlagring
clevis
Zentrierung DS M30 nach JN-06.02
center hole DS M30 per JN-06.02
Zahnwellenverbindung
Profil N 220×10×20 DIN 5480
involute spline
profile N 220×10×20 DIN 5480
Z 1:6
Paßfedern und Nuten nach DIN 6885 Blatt 1
parallel keys and keyways per DIN 6885 page 1
Fertiggewicht in kg
3960
Maßstab
1:12
Werkstoff:
KPL 30/II
Zeichnungs-Nr.:
11 563 271 00
(A)
Jahnel-Kestermann
Getriebewerke

Power data

The max. transmissible continuous power is at an input speed of 1750 rpm and ratio of:

ratio	continuous Power		input torque	output speed	chain velocity m/s				
nominal value	kW	HP	daNm	rpm	* 473	487	530	555	567
25	735	1000	410	70,9	1,76	1,81	1,97	2,06	2,11
28	735	1000	410	62,2	1,54	1,58	1,72	1,81	1,85
33	735	1000	410	52,4	1,30	1,34	1,46	1,52	1,56
39	735	1000	410	44,5	1,10	1,13	1,23	1,29	1,32

Joining

input shaft: ∅100 x 210 : parallel key, keyway per DIN 6885, page 1
output shaft: hollow shaft with internal gear N 220 x 10 x 20, DIN 5480

* chain driving wheel p.c.dia

∅473 mm for chain 26 x 92 8 teeth
∅487 mm for chain 30 x 108 7 teeth
∅530 mm for chain 26 x 92 9 teeth
∅555 mm for chain 30 x 108 8 teeth
∅567 mm for chain 34 x 126 7 teeth

Size comparison of planetary gearboxes for 60 Hz US execution

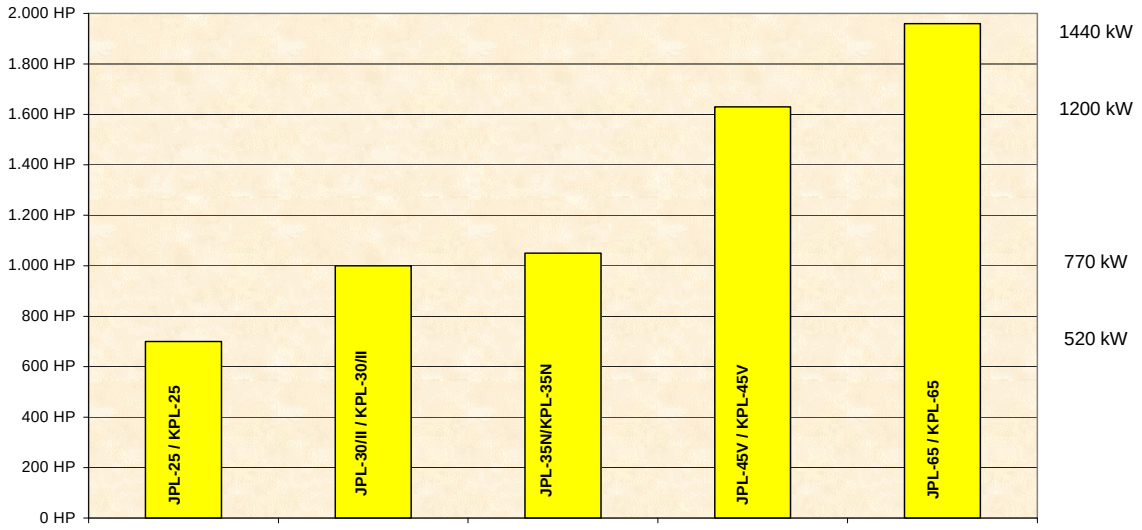

getriebe

In case of any question please contact

getriebe

Michael Wernitz
Bereichsleiter
Division Manager

Tel. +49 (0)234-339-249
Fax +49 (0)234-339-200
e-mail: Wernitz@jake-gear.com

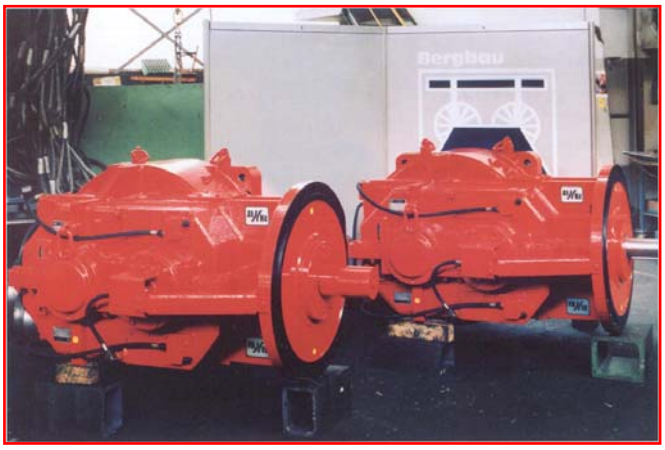

. . . or apply directly to

Jahnel-Kestermann
Getriebewerke GmbH
Hunscheidtstr. 116
44789 Bochum
Tel.: 0049 234 339-238
Fax: 0049 234 339-200
email: sales@jake-gear.com

getriebe

That's service

At any time - In all places - Under guarantee

As specialists in special gears and transmission technology, we follow innovative methods, utilise latest technology, find solutions which are forward-looking, economical and safe.

Our most powerful drive is our experience.

Ja)(Ke-drives are installed worldwide for use under the hardest of conditions such as in the fields of mining, chemical industry, shipbuilding and general industry (steel and rolling mill construction, cement, wind, sugar, rubber and synthetic industries). In order to secure flawless operation at all times in all places and to prevent down-time, we have improved our already well-known service still further.

We offer you :

1. **Preventive maintenance**
   to ensure availability

2. **Operation plan for our specialists**
   Within 48 hours our service specialists are on the spot throughout Europe.

3. **Spare part supply**
   Supply of spare parts for both Ja)(Ke and other manufacturers' gears illustrates our broad spectrum.

4. **6-months minimum guarantee on repaired gears**
   following guidelines given by us

5. **Performance and quality guarantee**
   We modernise your gears according to latest technology.

Whatever problem you may have, we are always promptly on your doorstep. It is of no significance whether our gears are involved or those of other manufacturers. We do not differentiate.

Jahnel-Kestermann Getriebewerke GmbH · PO Box 101249· 44712 Bochum· Germany Tel. +49(0)234-339-238· Fax +49(0)234-339-200· e-mail: sales@jake-gear.com

getriebe

TALK TO US
your service partner :

Gerhard Brexeler
sales director
phone : +49 234 339 261
fax : +49 234 339 200
email : brexeler@jake-gear.com

Dipl. Ing. Michael Wernitz
division manager
phone : +49 234 339 249
fax : +49 234 339 229
email : wernitz@jake-gear.com

you may also visit our homepage : http://www.jake-gear.com

Jahnel – Kestermann
Getriebewerke GmbH
Hunscheidtstrasse 116
44789 Bochum, Germany